SuperLead®

Wireless Bluetooth 2D Scanner

2830

1D / 2D | High speed scan | Big vision | Fast decoding | Screen scan | Customized | 2M/S Motion tolerance | IP52 Waterproof level | Large battery | 1.5M Drop resistance

GENERAL FEATURES

- Low power consumption, high performance
- Comprehensive reading of all mainstream 1-D, 2-D code
- Quickly read product codes and payment codes
- Supports RS232 interface and USB interface
- Accurately read the damage code, stain code, reflective code and other special bar codes
- Self-sensing reading, scanning sensitive

V.01.20240131

All specification and
designs are subject
to change without notice.

2830

Specifications

Physical Characteristics

Dimensions	77.4mm x 69.3mm x 168.7mm
Weight	207g
Voltage/Current	5 VDC/ 350mA(opearting); 35mA(standby)

Performance Characteristics

Image(Pixels)		640 p(H) x 480 p(V)
Light Source		Aimer: 617nm red LED; illumination: 3500K white LED
Field of View		40° (H) x 31° (V)
Scan Angle		Pitch ±65° Yaw 360° Roll ±60°
Symbol Contrast		≥25%
Interface		USB, RS232
Motion Tolerance		≥2m/s
Operating Distance		100m (open space)
Endurance Time		18H (continuous code scanning at an interval of 5 seconds)
Charging Time		5-6H
Bluetooth		Bluetooth 5.0
Symbologies	1D	Code 128, EAN-8, EAN-13, UPC-A, UPC-E, Interleaved 2 of 5, Matrix 2 of 5, Industrial 2 of 5, Code 39, Code93, Codabar, GS1-128, MSI Plessey, Code 11, Code 32, CodaBlock F Code, GS1 DataBar, China Post, Telepen
	2D	PDF417, QR Code, Data Matrix, Aztec, Maxi Code, Hanxin

User Environment

Operating Temperature	0°C ~ 50°C
Storage Temperature	-20°C ~ 60°C
Drop Resistance	Withstand drop 1.5m on concrete
Humidity	5% ~ 95%, non-condensing
Waterproof Class	IP52
Ambient Light Immunity	86,000 Lux.

Suzhou SuperMax Smart System Co.,Ltd.
TEL:400-850-8151
E-MAIL:sales@superlead.com
WEB: www.isuperlead.com
ADD: Building 57,No.2 Dongfu Road,Suzhou
Industrial Park,Jiangsu,China.

V.01.20240131

All specification and
designs are subject
to change without notice.

2830

Specifications

Typical Depth of Field

Code 39 (3.13 mil)	50mm-100mm
Code 39 (5.13 mil)	30mm-170mm
Code 39 (20 mil)	30mm-450mm
UPC-A (13 mil)	30mm-320mm
PDF (6.88 mil)	30mm-180mm
DM (10 mil)	20mm-180mm
QR (20 mil)	20mm-300mm

Dimensions (unit: mm)

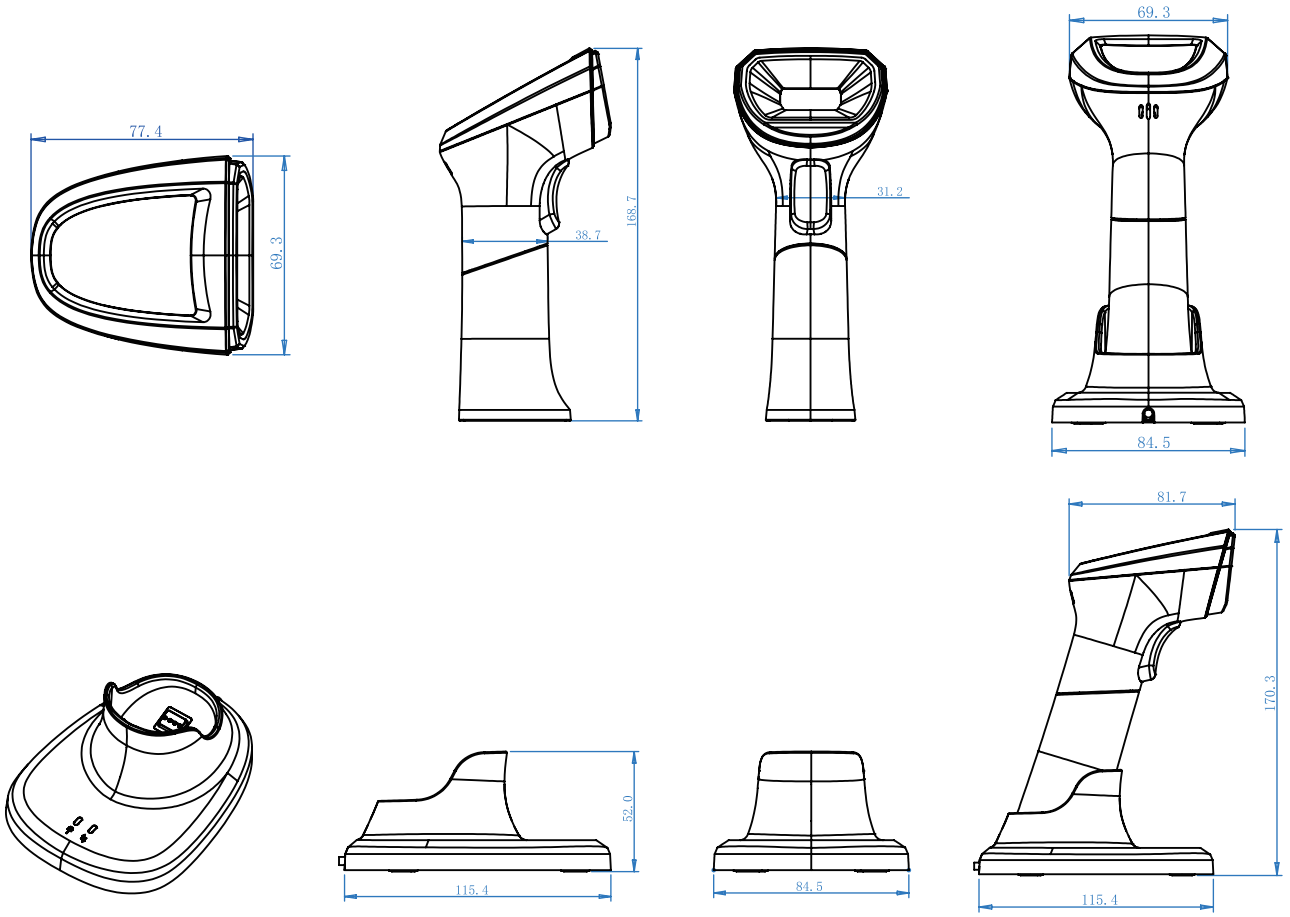

Suzhou SuperMax Smart System Co.,Ltd.
TEL:400-850-8151
E-MAIL:sales@superlead.com
WEB: www.isuperlead.com
ADD: Building 57,No.2 Dongfu Road,Suzhou
Industrial Park,Jiangsu,China.